Current part is item (1) on diagram. Available at www.oshkoshequipment.com

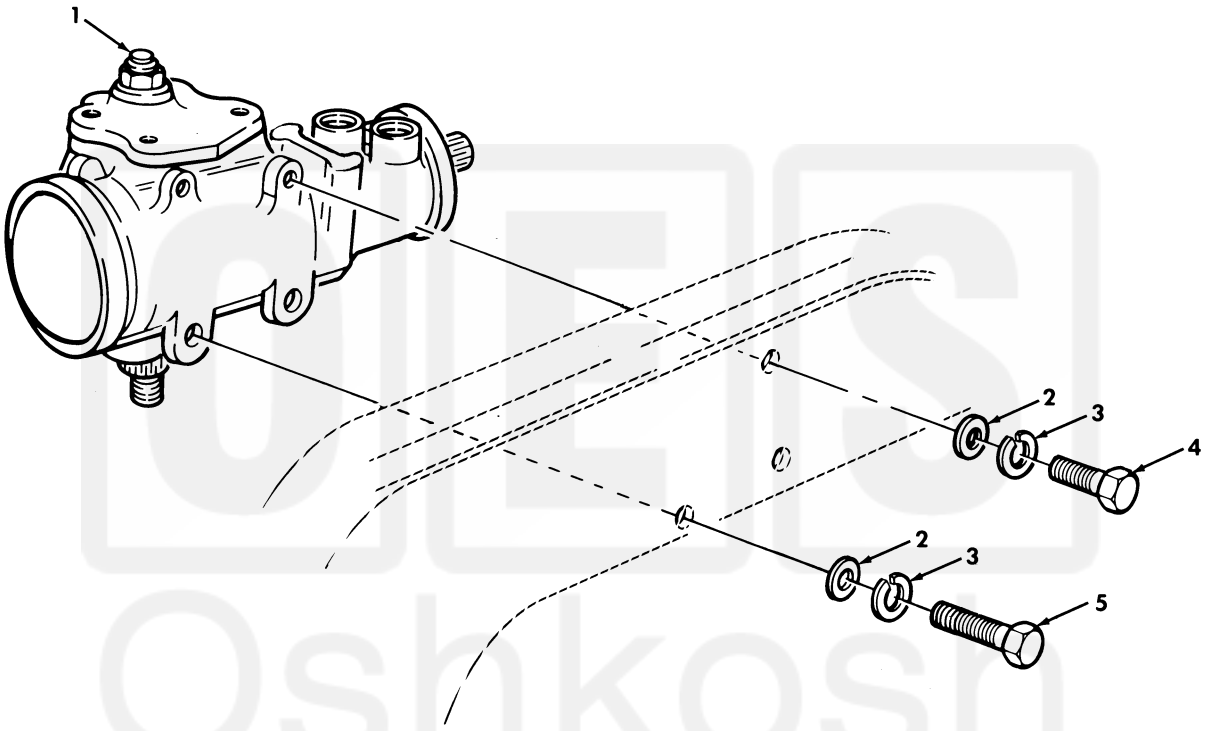

Figure 171. Power Steering Gear and Mounting Hardware.

Current part is item (1) on diagram. Available at www.oshkoshequipment.com

Current part is item (1) on diagram. Available at www.oshkoshequipment.com

(1) ITEM NO	(2) SMR CODE	(3) NSN	(4) CAGEC	(5) PART NUMBER	(6) DESCRIPTION AND USABLE ON CODES(UOC)	(7) QTY
					GROUP 1407 POWER STEERING GEAR ASSEMBLY	
					FIG. 171 POWER STEERING GEAR AND MOUNTING HARDWARE	
1	PAOFF	2530014231796	34623	12460232	STEERING GEAR.....	1
2	PAOZZ	5310008094085	96906	MS27183-16	WASHER,FLAT 7/16.....	3
3	PAOZZ	5310002090965	96906	MS35338-47	WASHER,LOCK 7/16.....	3
4	PAOZZ	5306012546356	96906	MS35764-861	BOLT,SELF-LOCKING 7/16-14 X 4.00...	1
5	PAOZZ	5305012134149	7X677	9430761	SCREW,CAP,HEXAGON H 7/16-14 X 5.25.	2

END OF FIGURE

Current part is item (1) on diagram. Available at www.oshkoshequipment.com